Оптический трансивер NS-SFP 1,25G DWDM 1.25Gb/s 160km DWDM SFP Transceiver

Features:

- Hot-Pluggable
- Duplex LC connector
- Up to 1.25Gb/s data rate
- 100GHz ITU Grid, C Band
- DWDM COOLED DFB transmitter, APD photo-detector
- SMF links up to 160km
- 2-wire interface for management specifications compliant with SFF 8472 digital diagnostic monitoring interface
- Power Supply :+3.3V
- Power consumption<1.5W
- Temperature Range: 0~ 70° C
- RoHS compliant

Applications:

- 1G Fibre channel
- DWDM Networks

Description:

NS-SFP-Dxx is a very compact 1.25Gb/s optical transceiver module for serial optical communication applications at 1.25Gb/s. The PPL1GF0D-Dxx converP a 1.25Gb/s serial electrical data stream to 1.25Gb/s optical output signal and a 1.25Gb/s optical input signal to 1.25Gb/s serial electrical data streams. The high speed 1.25Gb/s electrical interface is fully compliant with SFI specification.

The high performance DWDM COOLED DFB transmitter and high sensitivity APD receiver provide superior performance for Ethernet applications at up to 160km links.

The SFP Module complianP with SFF-8431, SFF-8432 Digital diagnostics functions are available via a 2-wire serial interface, as specified in SFF-8472.

The fully SFP compliant form factor provides hot pluggability, easy optical port upgrades and low EMI emission.

- **Absolute Maximum Ratings**

Parameter	Symbol	Min.	Typical	Max.	Unit
Storage Temperature	P	-40		+85	°C
Case Operating Temperature	T_A	0		70	°C
Maximum Supply Voltage	Vcc	-0.5		4	V
Relative Humidity	RH	0		85	%

- **Electrical Characteristics (T_{OP} = 0 to 70 °C, VCC = 3.135 to 3.465 VolP)**

Parameter	Symbol	Min.	Typical	Max.	Unit	Note
Supply Voltage	Vcc	3.135		3.465	V	
Supply Current	Icc			450	mA	
Power Consumption	P			1.5	W	
Transmitter Section:						
Input differential impedance	R_{in}		100		Ω	1
Tx Input Single Ended DC Voltage Tolerance (Ref VeeT)	V	-0.3		4	V	
Differential input voltage swing	Vin,pp	180		700	mV	2
Transmit Disable Voltage	V_D	2		Vcc	V	3
Transmit Enable Voltage	V_{EN}	Vee		Vee+0.8	V	
Receiver Section:						
Single Ended Output Voltage Tolerance	V	-0.3		4	V	
Rx Output Diff Voltage	Vo	300		850	mV	
Rx Output Rise and Fall Time	Tr/Tf	30			ps	4
LOS Fault	$V_{LOS\ fault}$	2		Vcc_{HOST}	V	5
LOS Normal	$V_{LOS\ norm}$	Vee		Vee+0.8	V	5

Note:

1. Connected directly to TX data input pins. AC coupling from pins into laser driver IC.
2. Per SFF-8431 Rev 3.0
3. Into 100 ohms differential termination.
4. 20%～80%
5. LOS is an open collector output. Should be pulled up with 4.7k – 10kΩ on the host board. Normal operation is logic 0; loss of signal is logic 1. Maximum pull-up voltage is 5.5V.

- **Optical Parameters(TOP = 0 to 70°C, VCC = 3.135 to 3.465 VolP)**

Parameter	Symbol	Min.	Typical	Max.	Unit	Note
Transmitter Section:						
Optical Wavelength-End Of Life	λ	X-100	X	X+100	pm	
Optical Wavelength-Beginning Of Life	λ	X-25	X	X+25	pm	
Average Optical Power	Pavg	+2		+5	dBm	1
Laser Off Power	Poff			-30	dBm	
Extinction Ratio	ER	8.2			dB	
Transmitter Dispersion Penalty	TDP			3.0	dB	
Relative Intensity Noise	Rin			-128	dB/Hz	2
Optical Return Loss Tolerance		20			dB	
Receiver Section:						
Center Wavelength	λr	1480		1580	nm	
Receiver Sensitivity (OMA)	Sen			-35	dBm	2
Los Assert	LOS_A	-46		-	dBm	
Los Dessert	LOS_D			-36	dBm	
Los Hysteresis	LOS_H	0.5			dB	
Overload	Sat	-8			dBm	3
Receiver Reflectance	Rrx			-12	dB	

Note:

1. Average power figures are informative only Fibre channel
2. 12dB reflection.
3. Receiver overload specified in OMA and under the worst comprehensive stressed condition.

Timing Characteristics

Parameter	Symbol	Min.	Typical	Max.	Unit
TX_Disable Assert Time	t_off			10	us
TX_Disable Negate Time	t_on			1	ms
Time to Initialize Include Reset of TX_FAULT	t_int			300	ms
TX_FAULT from Fault to Assertion	t_fault			100	us
TX_Disable Time to Start Reset	t_reset	10			us
Receiver Loss of Signal Assert Time	T_A,RX_LOS			100	us
Receiver Loss of Signal Deassert Time	T_d,RX_LOS			100	us
Rate-Select Chage Time	t_ratesel			10	us
Serial ID Clock Time	t_serial-clock			100	kHz

Pin Assignment

Diagram of Host Board Connector Block Pin Numbers and Name

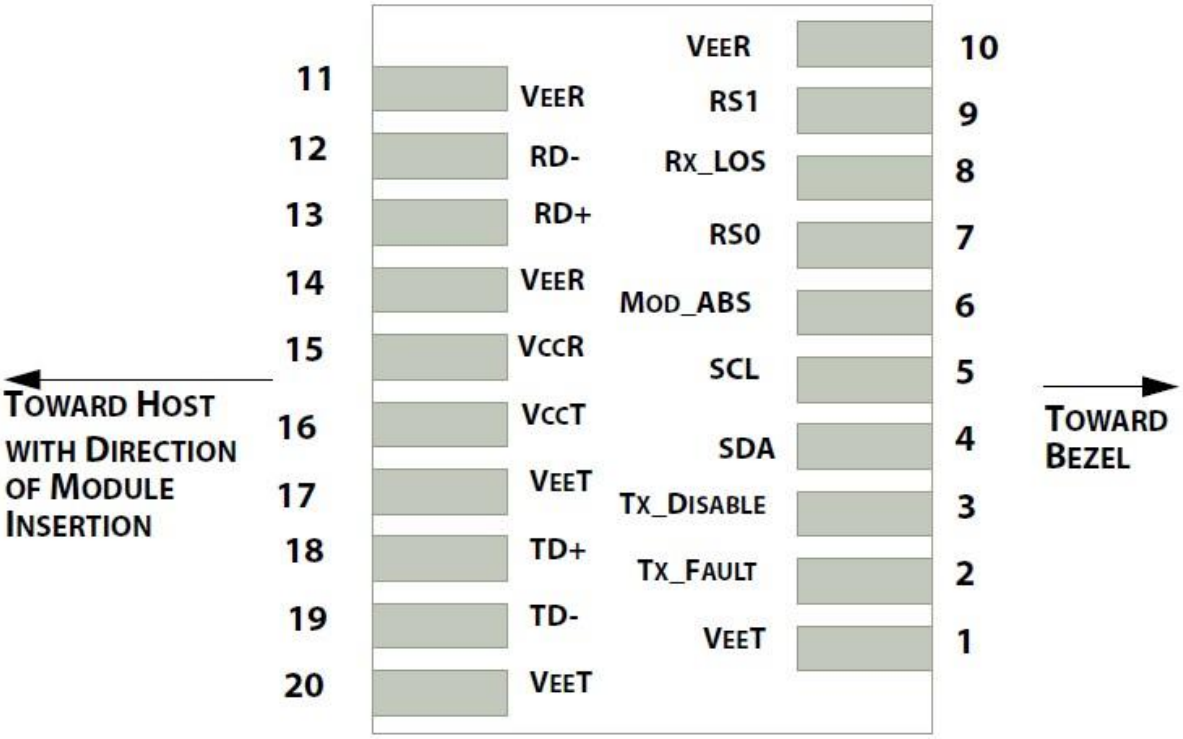

Pin Function Definitions

PIN #	Name	Function	Notes
1	VeeT	Module transmitter ground	1
2	Tx Fault	Module transmitter fault	2
3	Tx Disable	Transmitter Disable; Turns off transmitter laser output	3
4	SDL	2 wire serial interface data input/output (SDA)	
5	SCL	2 wire serial interface clock input (SCL)	
6	MOD-ABS	Module Absent, connect to VeeR or VeeT in the module	2
7	RS0	Rate select0, optionally control SFP receiver. When high, input	

		data rate >4.5Gb/ s; when low, input data rate <=4.5Gb/s	
8	LOS	Receiver Loss of Signal Indication	4
9	RS1	Rate select0, optionally control SFP transmitter. When high, input data rate >4.5Gb/s; when low, input data rate <=4.5Gb/s	
10	VeeR	Module receiver ground	1
11	VeeR	Module receiver ground	1
12	RD-	Receiver inverted data out put	
13	RD+	Receiver non-inverted data out put	
14	VeeR	Module receiver ground	1
15	VccR	Module receiver 3.3V supply	
16	VccT	Module transmitter 3.3V supply	
17	VeeT	Module transmitter ground	1
18	TD+	Transmitter inverted data out put	
19	TD-	Transmitter non-inverted data out put	
20	VeeT	Module transmitter ground	1

Note:

1. The module ground pins shall be isolated from the module case.
2. This pin is an open collector/drain output pin and shall be pulled up with 4.7K-10Kohms to Host_Vcc on the host board.
3. This pin shall be pulled up with 4.7K-10Kohms to VccT in the module.
4. This pin is an open collector/drain output pin and shall be pulled up with 4.7K-10Kohms to Host_Vcc on the host board.

● SFP Module EEPROM Information and Management

The SFP modules implement the 2-wire serial communication protocol as defined in the SFP

-8472. The serial ID information of the SFP modules and Digital Diagnostic Monitor parameters can be accessed through the I^2C interface at address A0h and A2h. The memory is mapped in Table 1. Detailed ID information (A0h) is listed in Table 2. And the DDM specification at address A2h. For more details of the memory map and byte definitions, please refer to the SFF-8472, “Digital Diagnostic Monitoring Interface for Optical Transceivers”. The DDM parameters have been internally calibrated.

Table 1. Digital Diagnostic Memory Map (Specific Data Field Descriptions)

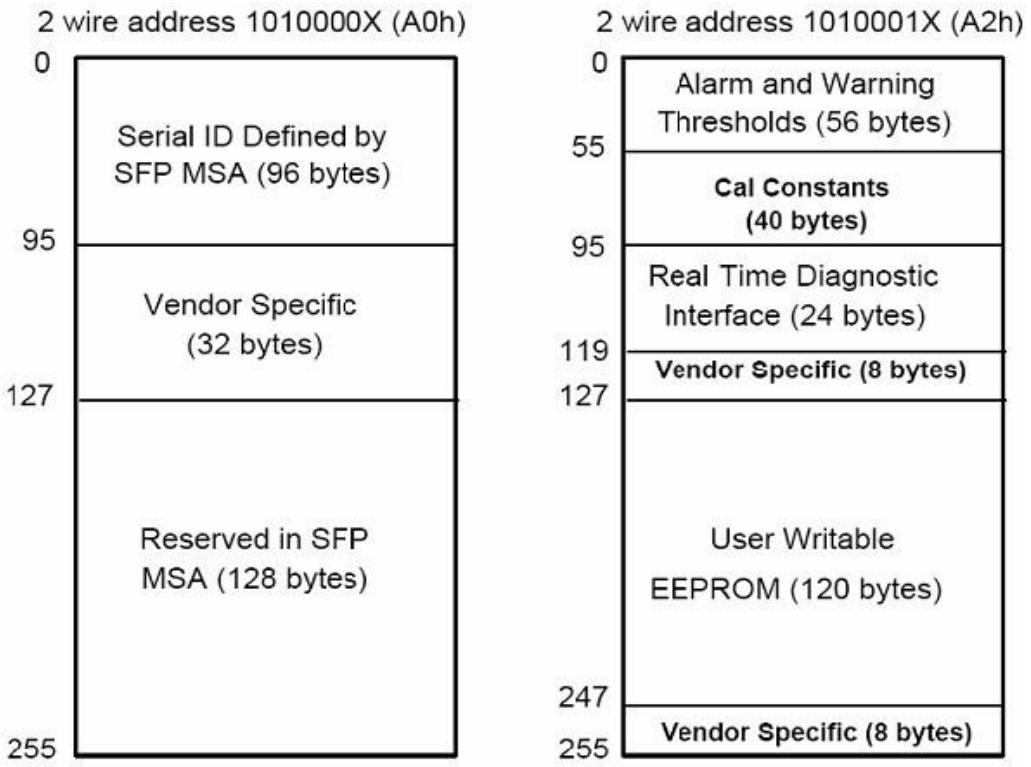

Table 2 - EEPROM Serial ID Memory ContenP (**A0h**)

Data	Length	Name of	Description and ContenP

Address	(Byte)	Length	
Base ID Fields			
0	1	Identifier	Type of Serial transceiver (03h=SFP)
1	1	Reserved	Extended identifier of type serial transceiver (04h)
2	1	Connector	Code of optical connector type (07=LC)
3-10	8	Transceiver	1000Base-LX
11	1	Encoding	8B10B
12	1	BR, Nominal	Nominal baud rate, unit of 100Mbps
13-14	2	Reserved	(0000h)
15	1	Length(9um)	Link length supported for 9/125um fiber, uniP of 100m
16	1	Length(50um)	Link length supported for 50/125um fiber, uniP of 10m
17	1	Length(62.5um)	Link length supported for 62.5/125um fiber, uniP of 10m
18	1	Length(Copper)	Link length supported for copper, uniP of meters
19	1	Reserved	
20-35	16	Vendor Name	SFP vendor name: TIBTRONIX
36	1	Reserved	
37-39	3	Vendor OUI	SFP transceiver vendor OUI ID
40-55	16	Vendor PN	Part Number: “PPL1GF0D-Dxx” (ASCII)
56-59	4	Vendor rev	Revision level for part number
60-62	3	Reserved	
63	1	CCID	Least significant byte of sum of data in address 0-62
Extended ID Fields			

64-65	2	Option	Indicates which optical SFP signals are implemented (001Ah = LOS, TX_FAULT, TX_DISABLE all supported)
66	1	BR, max	Upper bit rate margin, uniP of %
67	1	BR, min	Lower bit rate margin, uniP of %
68-83	16	Vendor SN	Serial number (ASCII)
84-91	8	Date code	TIBTRONIX's Manufacturing date code
92-94	3	Reserved	
95	1	CCEX	Check code for the extended ID Fields (addresses 64 to 94)
Vendor Specific ID Fields			
96-127	32	Readable	TIBTRONIX specific date, read only
128-255	128	Reserved	Reserved for SFF-8079

Digital Diagnostic Monitor Characteristics

Data Address	Parameter	Accuracy	Unit
96-97	Transceiver Internal Temperature	±3.0	°C
98-99	VCC3 Internal Supply Voltage	±3.0	%
100-101	Laser Bias Current	±10	%
102-103	Tx Output Power	±3.0	dB
104-105	Rx Input Power	±3.0	dB

Regulatory Compliance

The NS-SFP-Dxx complies with international Electromagnetic Compatibility (EMC) and international safety requiremenP and standards (see details in Table following).

Electrostatic Discharge (ESD) to the Electrical Pins	MIL-STD-883E Method 3015.7	Class 1(>1000 V)
Electrostatic Discharge (ESD) to the Duplex LC Receptacle	IEC 61000-4-2 GR-1089-CORE	Compatible with standards
Electromagnetic Interference (EMI)	FCC Part 15 Class B EN55022 Class B (CISPR 22B) VCCI Class B	Compatible with standards
Laser Eye Safety	FDA 21CFR 1040.10 and 1040.11 EN60950, EN (IEC) 60825-1,2	Compatible with Class 1 laser product.

- **Recommended Circuit**

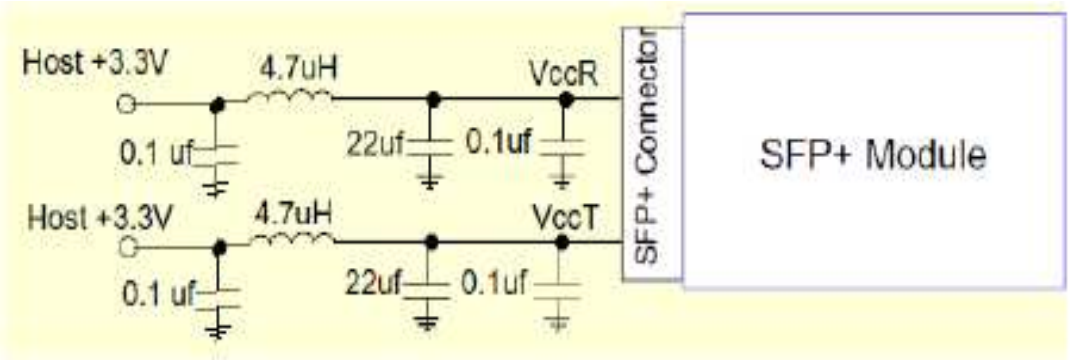

Recommended Host Board Power Supply Circuit

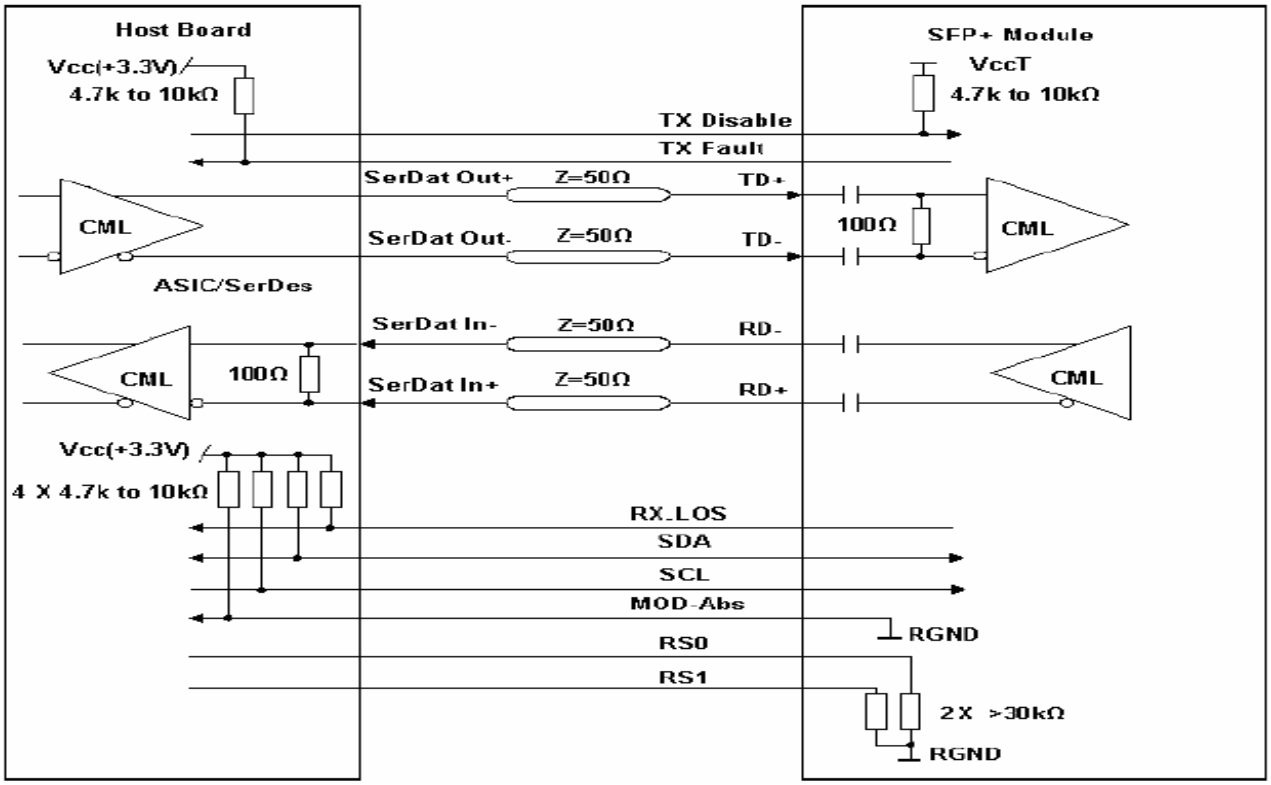

Recommended High-speed Interface Circuit

- **Mechanical Dimensions**

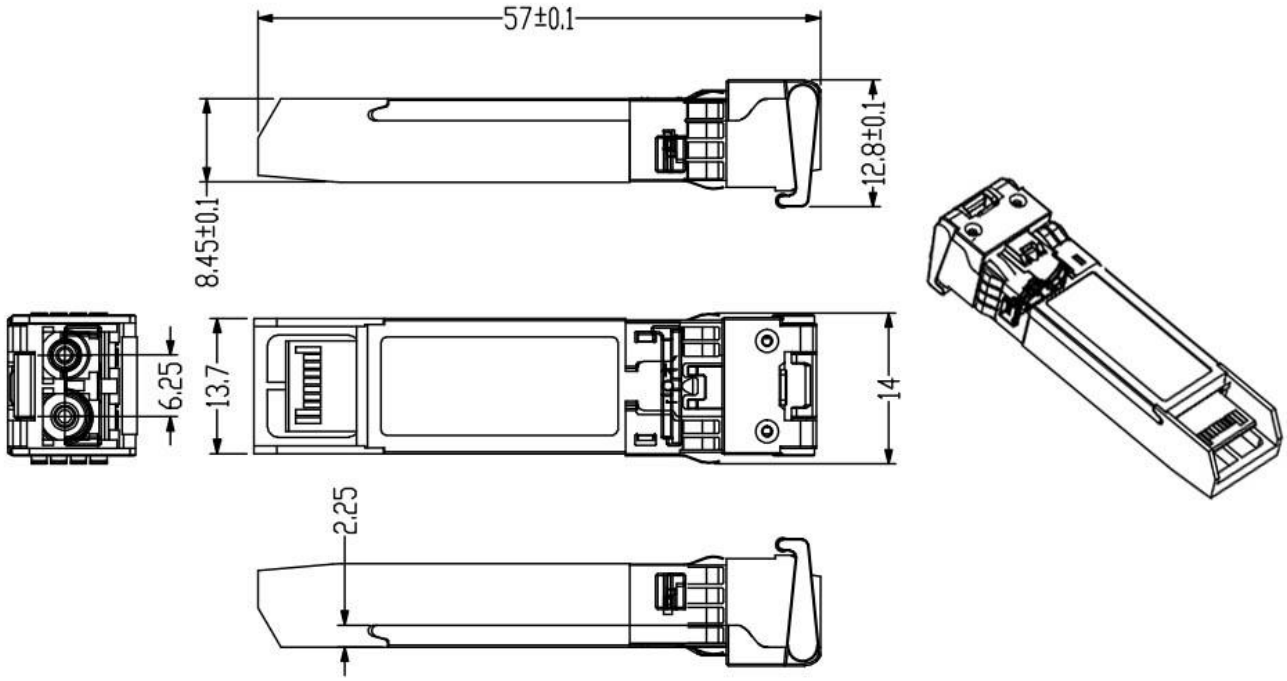

Order Information:

NS-SFP-Dxx **XX: 100GHZ ITU Grid Wavelength**

Part No.	Central Wavelength(nm)	Frequency (THZ)
NS-SFP-D61	1528.77	196.1
NS-SFP-D60	1529.55	196.0
NS-SFP-D59	1530.33	195.9
NS-SFP-D58	1531.12	195.8
NS-SFP-D57	1531.90	195.7
NS-SFP-D56	1532.68	195.6

NS-SFP-D55	1533.47	195.5
NS-SFP-D54	1534.25	195.4
NS-SFP-D53	1535.04	195.3
NS-SFP-D52	1535.82	195.2
NS-SFP-D51	1536.61	195.1
NS-SFP-D50	1537.40	195.0
NS-SFP-D49	1538.19	194.9
NS-SFP-D48	1538.98	194.8
NS-SFP-D47	1539.77	194.7
NS-SFP-D46	1540.56	194.6
NS-SFP-D45	1541.35	194.5
NS-SFP-D44	1542.14	194.4
NS-SFP-D43	1542.94	194.3
NS-SFP-D42	1543.73	194.2
NS-SFP-D41	1544.53	194.1
NS-SFP-D40	1545.32	194.0
NS-SFP-D39	1546.12	193.9
NS-SFP-D38	1546.92	193.8
NS-SFP-D37	1547.72	193.7
NS-SFP-D36	1548.51	193.6
NS-SFP-D35	1549.32	193.5
NS-SFP-D34	1550.12	193.4

NS-SFP-D33	1550.92	193.3
NS-SFP-D32	1551.72	193.2
NS-SFP-D31	1552.52	193.1
NS-SFP-D30	1553.33	193.0
NS-SFP-D29	1554.13	192.9
NS-SFP-D28	1554.94	192.8
NS-SFP-D27	1555.75	192.7
NS-SFP-D26	1556.55	192.6
NS-SFP-D25	1557.36	192.5
NS-SFP-D24	1558.17	192.4
NS-SFP-D23	1558.98	192.3
NS-SFP-D22	1559.79	192.2
NS-SFP-D21	1560.61	192.1
NS-SFP-D20	1561.42	192.0
NS-SFP-D19	1562.23	191.9
NS-SFP-D18	1563.05	191.8
NS-SFP-D17	1563.86	191.7